***** INSTALLATION INSTRUCTIONS *****

ASSEMBLY: ITEM NO. 40125/40126

STEP1. TAKE OUT LAMP PARTS FROM THE PACKAGE SLOWLY, PLACE THEM ON SMOOTH AND LEVEL SURFACE.

STEP2. CONNECT THE TERMINAL A AND B BETWEEN THE TUBE AND THE TABLE BASE.

STEP3. TWIST THE TUBE ONTO THE TABLE BASE .

STEP4. PLACE HARP INTO THE SADDLE OF THE TUBE.

STEP5. PLACE THE SHADE ONTO THE HARP.

STEP6. ROTATE TO TIGHTEN THE FINIAL.
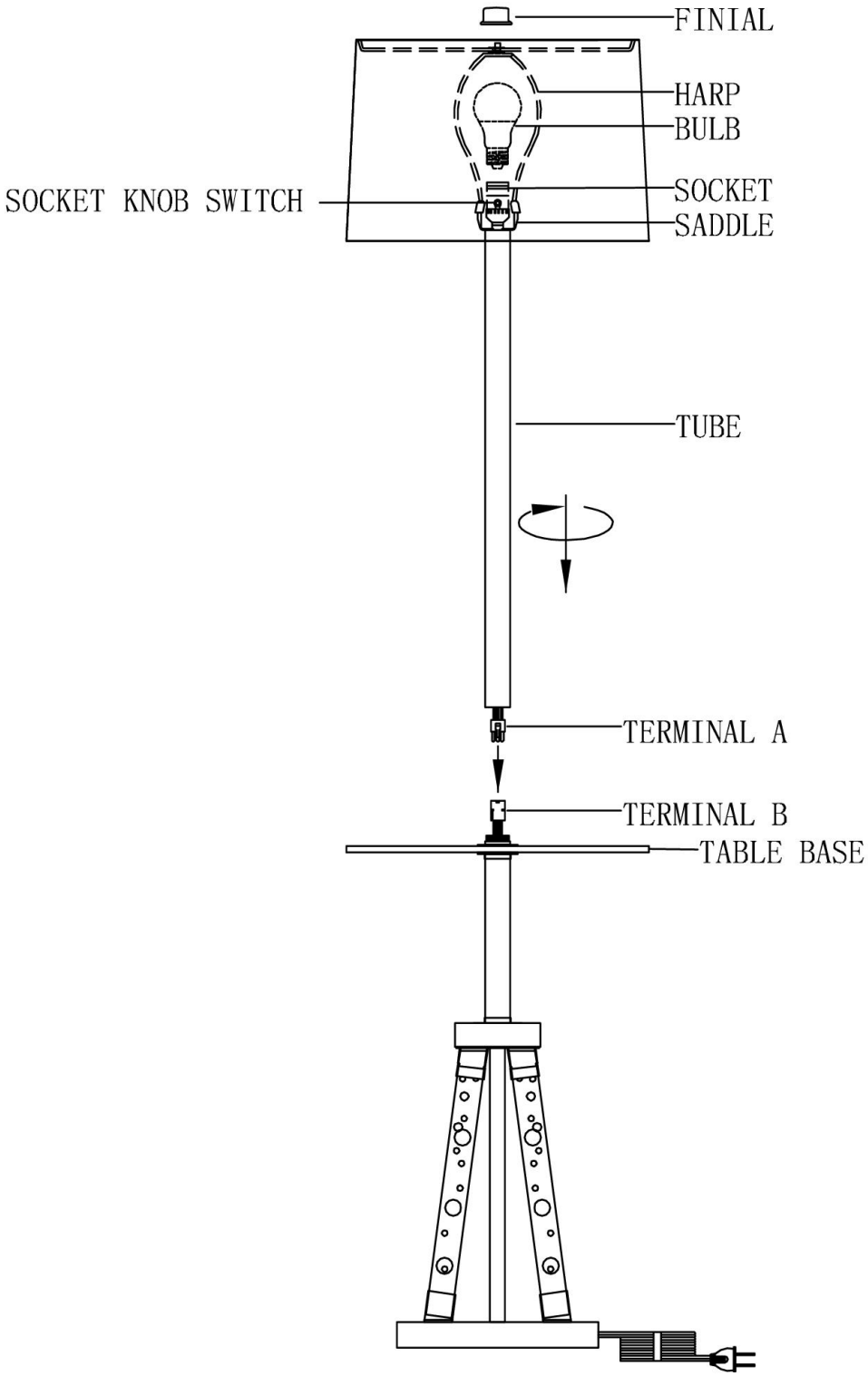
STEP7. ALIGN AND INSTALL THE BULB TO THE SOCKET.